FRAMEWORKS

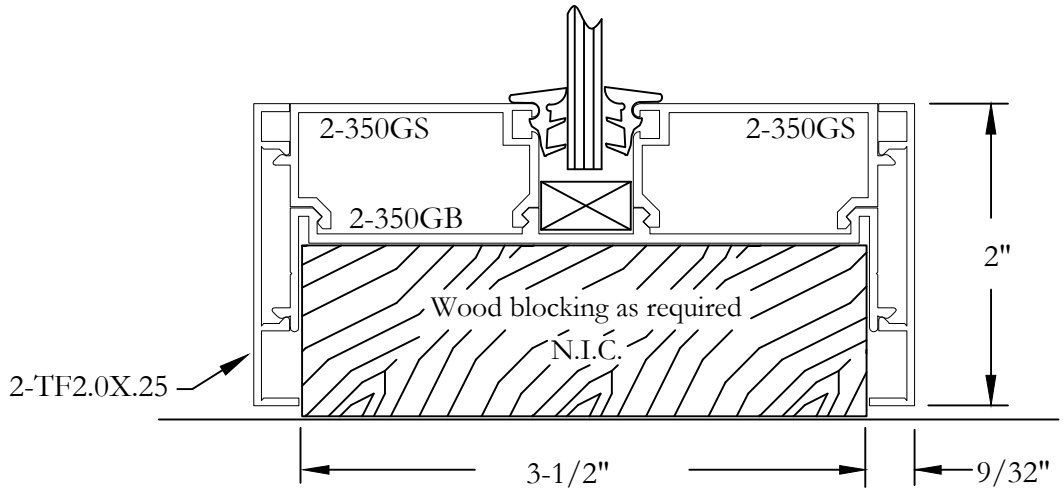
2-350GS
2-350GS
2-350GB
2"
Wood blocking as required
N.I.C.
2-TF2.0X.25
3-1/2"
9/32"