FRAMEWORKS

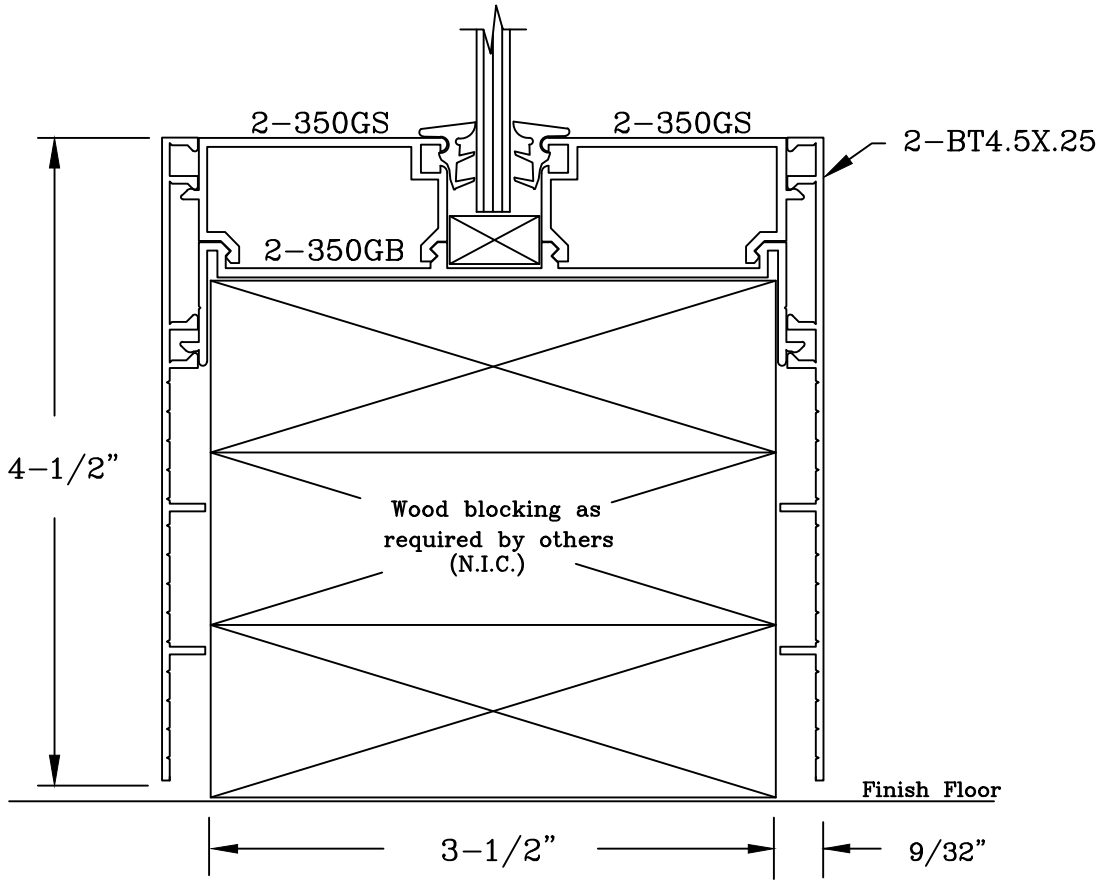
2-350GS
2-350GS
2-BT4.5X.25
2-350GB
4-1/2"
Wood blocking as
required by others
(N.I.C.)
Finish Floor
3-1/2"
9/32"