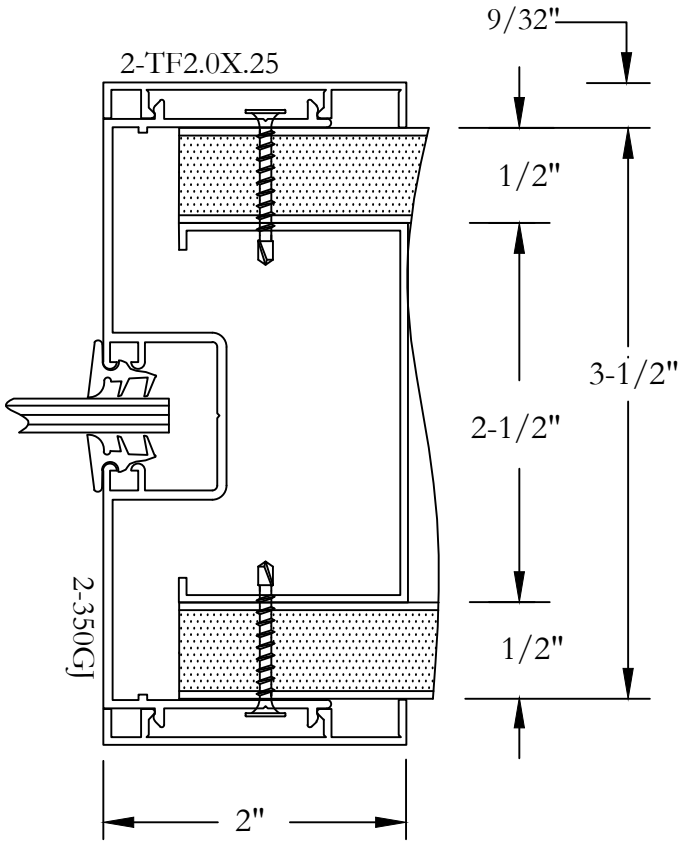FRAMEWORKS